VB-FULLAIR-2C

making everyday smoother

airsuspension

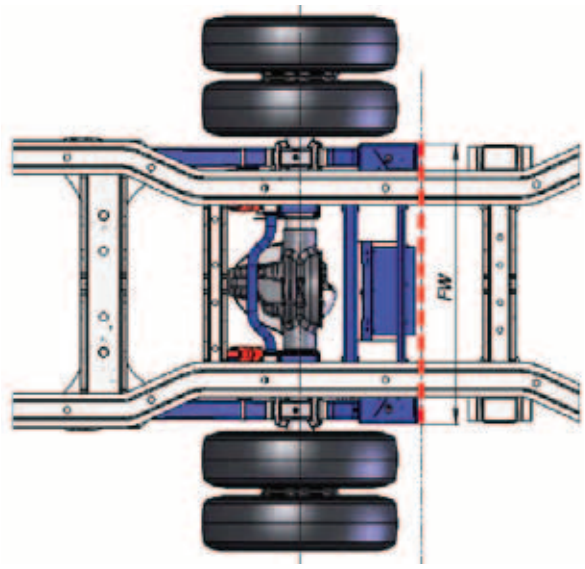

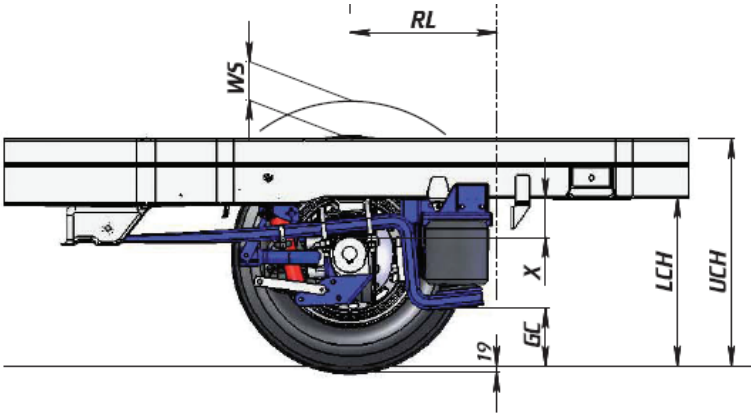

Rear axle type	Standard ride height			+25mm ride height		
Description*	Min. height	Rideheight	Max.height	Min. height	Rideheight	Max.height
Lower chassis height (LCH)	440 mm	500 mm	525 mm	465 mm	525 mm	550 mm
Upper chassis height (UCH)	620 mm	680 mm	705 mm	645 mm	705 mm	730 mm
Ground clearance (GC)	136 mm	119 mm	110 mm	145 mm	120 mm	100 mm
X-value (X)	60 mm	120 mm	145 mm	85 mm	145 mm	170 mm
Rear length (RL)	440 mm					
Frame width (FW)	770 mm					
Wheel space (WS)	120 mm					

* All the measurements are in mm, measured above the centre-line of the rearaxle on standard chassis vehicle, with tyre size 195/75R16 and a rear axle load of 3000kg. Therefor a tyre compression of 19mm is included.

• Increased comfort • Better driveability • More safety

MERCEDES BENZ SPRINTER 5,0T

TECHNICAL SPECIFICATION

TECHNICAL SPECIFICATION

Air-suspension system

Suspension system contains main springs, air-springs, shock absorbers, a cross beam, stabiliser bar and a compressorbox. The system has a dual-air-circuit with twin height sensors.

The Electronics of the air suspension is tested according to EMC (european directives for electronics) directive 72/245/EWG last amended, 2006/28/EG.

The air-suspension can be controlled by the supplied remote control. There are different options for this: VB-SRC (Standard Remote Control) or a simple control unit. It's even possible to control the system trough the electrical system or CAN-bus system of the body builder.
For more information, contact VB-Airsuspension.

Weights

The weight change of the vehicle with leaf spring A906 320 0206 after switching to air-suspension is +42kg.

Raise and lower times

The raise en lower times depend on the load of the vehicle. The measured values are achieved with a rear axle load of 3000kg.

				Standard	+25mm
Raise time	Lowest position	→	Ride height	**34 sec.**	**47 sec.**
	Ride height	→	Highest position	**62 sec.**	**20 sec.**
Lower time	Highest position	→	Ride height	**16 sec.**	**9,5 sec.**
	Ride height	→	Lowest position	**14 sec.**	**15,5 sec.**

Compressor

Contains an air dryer, thermal circuit breaker and a pressure protection valve.

Operating voltage:	12V
Nominal current:	26A
Starting current:	≤ 120 A over t ≤ 100ms
Degree of protection	IP68
Maximum pressure:	10-13 bar

Dealer:

Air-spring

VB-TS (Tapered Sleeve) with double polyamide cord ply and extra low resistance and hysteresis. This air-spring is specially developed for use with light commercial vehicles.

Options

- Emercency valve kit 2C
- Rear-door switch kit
- Extra-time module
- VB-AOMS (Axle Overload Monitoring System)

Comments

- For the fitting of the air-suspension kit, the factory option EK1 is required.
- When the vehicle doesn't have the option C42 (heavy stabiliser), there has to be an extra stabiliser bracket kit ordered by VB-Airsuspension (VB article no: 1052350021)
- If the vehicle is equipped with Xenon headlights (factory option LG1), the control of it has to be modified. Please order the Xenon modification kit VB-article no.: 1052350009.
- For vehicles with a wheelbase of 3665 mm, it is not possible to mount the spare wheel on the original way. On a chassis-cab the spare wheel bracket has to be modified. The original bracket on the chassis has to be removed and the spare wheel bracket is refitted to the upper crossbeam of the air-suspension. Another option is (necessary for a Van) to order the following factory options: R92 / RR7 / R87.
- The WS measure does not reckon with the fitment of snow chains.
- By fitting the air-suspension kit, the maximum GVW or the maximum axle load is not altered.
- This air-suspension kit is also available with electronics for external air-supply or with an increased driving height. For more information, please contact VB-Airsuspension.
- The measured weights are approximately determined.

The technical specifications are the standard VB-Airsuspension versions. Other specifications are on request.
VB-Airsuspension reserves the right to make changes without prior notification.